SUNON

SPECIFICATION FOR APPROVAL

CUSTOMER	:	
MOTOR TYPE	:	MAGLev® Fan & Blower by SUNON
MODEL NO	:	TA004-10003
DESCRIPTION	:	LED Cooling Module
DIMENSIONS	:	§ 86 × 52.4 mm
SUNON SPEC. NO.	:	D06056540G-00
CUSTOMER APPROVAL NO.	:	
APPROVED BY CUSTOMER (AUTHORIZED)	:	

DRAWN	CHECKED	APPROVED	SPEC. NO	D06056540G-00
Alice 7/25	Kiddy Cindy	William	ISSUED DATE	03. 31. 2011
			EDITION	1
			REVISION DATE	07. 25. 2011

建準電機工業股份有限公司
SUNONWEALTH ELECTRIC MACHINE INDUSTRY CO., LTD.
NO. 30, LN. 296, XINYA RD., QIANZHEN DIST., KAOHSIUNG CITY 80673, TAIWAN (R.O.C)
TEL:886-7-8135888
FAX:886-7-8230505/8230606/8231010
URL:http://www.sunon.com
E-mail: sunon@email.sunon.com.tw

建準電機工業股份有限公司
研發部
2011.08.01
發行章

SPECIFICATION FOR APPROVAL

CHECK LIST

1. SCOPE ---------- Page 2

2. SPECIFICATIONS ---------- Page 3

3. DIMENSION ---------- Page 4-5

4. NOTES ---------- Page 6-8

5.Declaration of RoHS ---------- Page 9

建準電機工業(股)公司 研發部 2011.08.01 發行章

1.SCOPE

This compact LED cooling module (including Sunon's patented fan) is designed for heat dissipation of 41W LED lamp. The following specification outlines the performance of this module for LED lighting system

建準電機工業(股)公司 研發部 2011.08.01 發行章

MODEL : TA004-10003

2.SPECIFICATIONS

1. Module Dimension	ϕ86 x 52.4 mm
2. Heat Sink Material	AL6063
3. Cooling Method	Fan
4. Fan Speed (with Heat Sink)	2200 RPM ± 10%
5. Rated Voltage	12 VDC
6. Rated Current	28 mA
7. Power Consumption	0.34 Watts
8. Fan Bearing System	Vapo
9. Cooling Module Noise @ 1M	16.2 dB(A)
10. Operating Voltage Range	6-13.8 VDC
11. Operating Temperature	-10 to + 70 deg. C
12. Storage Temperature	-40 to + 70 deg. C
13. Weight	233 g
14. Thermal resistance	0.52 ℃／Watts
15. Tolerance	±20% on rated power and current.
16. Safety	UL/CUR/TUV/CE Approvals
17. Life Expectancy (MTTF)	70,000 Hours at 60 deg. C, 65% humidity, 90% CL .

建準電機工業(股)公司 研發部 2011.08.01 發行章

3.DIMENSION

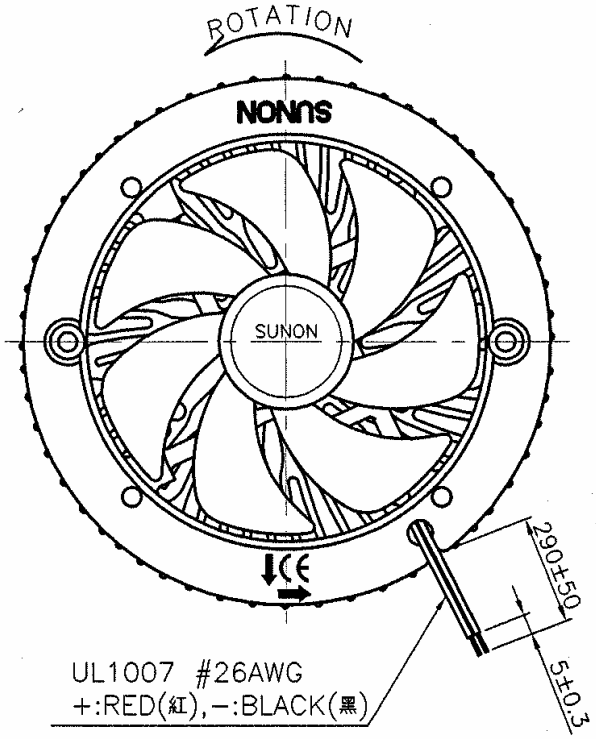

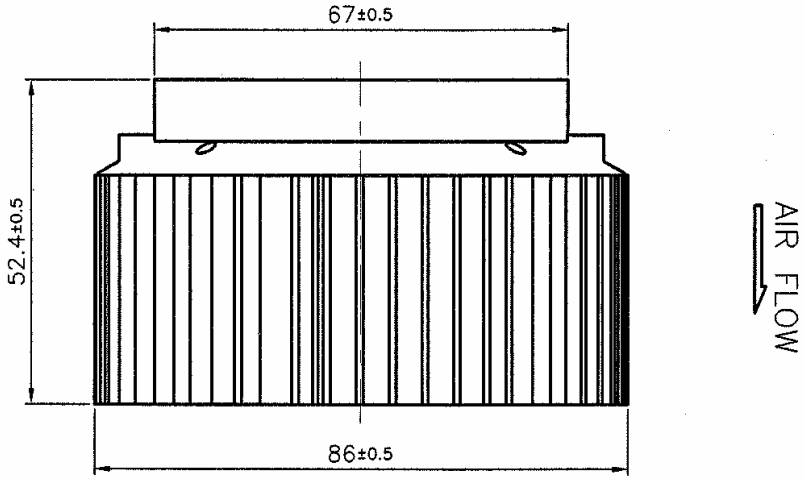

UNIT:mm

SUNONWEALTH ELECTRIC MACHINE INDUSTRY CO., LTD. 建準電機工業股份有限公司	PAGE	4 OF 9
	SPEC. NO.	D06056540G-00
	ISSUED DATE	03. 31. 2011
	EDITION	1
	REVISION DATE	07. 25. 2011

建準電機工業(股)公司 研發部 2011.08.01 發行章

3.DIMENSION

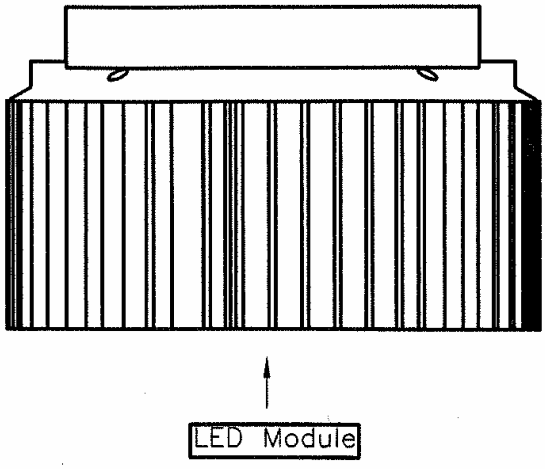

Assembly direction of customer's LED Module

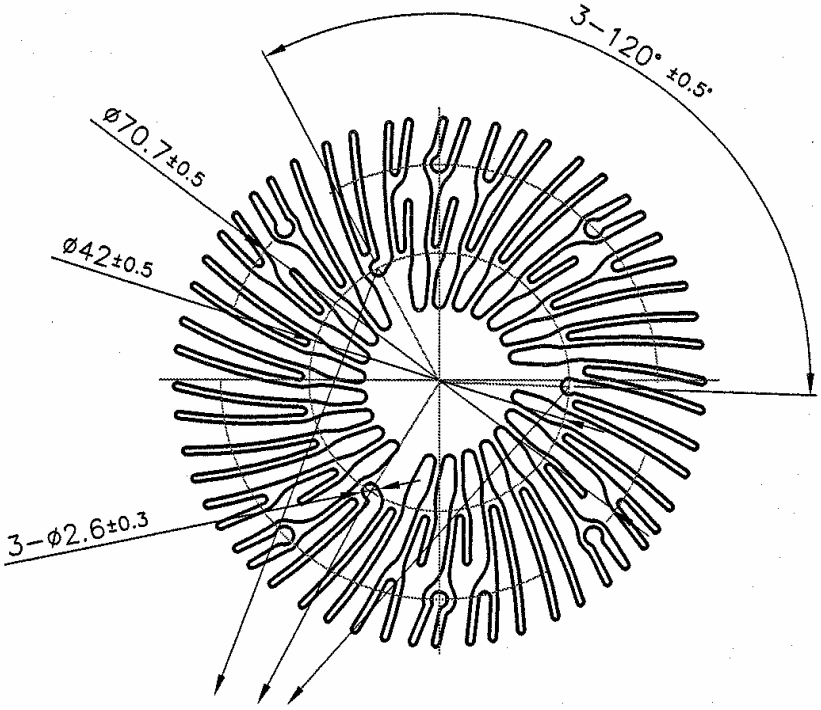

Screw torque max 12kgf.cm
Using M3*10mm Tapping Screw

UNIT:mm

建準電機工業(股)公司 研發部 2011.08.01 發行章

Notes

I .SAFETY

1. DO NOT use or operate this module in excess of the limitations set forth in this specification. SUNON is not be responsible for the non-performance of this module and/or any damages resulting from its use, if it is not used or operated in accordance with the specifications.
2. SUNON recommends adding a protection circuit to the product or application in which this module is installed, such as a thermo-fuse, or current-fuse or thermo-protector. The failure to use such a device may result in smoke, fire, electric shock by insulation degradation in cases of motor lead short circuit, overload, or over voltage, and/or other failure.
3. SUNON recommends installing a protection device to the product or application in which this module is installed if there is a possibility of reverse-connection between VDC (+) and GND (-). The failure to install such a device may result in smoke, fire, and/or destruction, although these conditions may not manifest immediately.
4. This module must be installed and used in compliance with all applicable safety standards and regulations.
5. Use proper care when handling and/or installing this module. Improper handling or installation of this module may cause damage that could result in unsafe conditions.
6. Use proper care during installation and/or wiring. Failure to use proper care may cause damage to certain components of the module including, but not limited to, the coil and lead wires, which could result in smoke and/or fire.
7. DO NOT use power or ground PWM to control the fan speed. If the fan speed needs to be adjusted, please contact Sunon to customize the product design for your application.
8. For critical or extreme environments, including non stop operation, please contact Sunon and we will gladly provide assistance with your product selection to ensure an appropriate cooling product for your application.

建準電機工業(股)公司 研發部 2011.08.01 發行章

Notes

II. SPECIFICATION MODIFICATION

1. SUNON offers engineering assistance on module installation and cooling system design.
2. All changes, modifications and/or revisions to the specifications, if any, are incorporated in the attached specifications.
3. No changes, modifications and/or revisions to these specifications are effective absent agreement, by both Sunon and the customer, in writing.
4. This module will be shipped in accordance with the attached specification unless SUNON and the customer have agreed otherwise, in writing, as specificied in Paragraph 3, above.

III. OTHER

1. When building your device, please examine thoroughly any variation of EMC, temperature rise, life data, quality, etc. of this product by shock/drop/vibration testing, etc. If there are any problems or accidents in connection with this product, it should be mutually discussed and examined.

2. Use proper care when handling this module. Components such as module holders or bearings may be damaged, if touched with fingers or other objects. Additionally, static electricity (ESD) may damage the internal circuits of the module.

3. DO NOT operate this module in proximity to hazardous materials such as organic silicon, cyanogens, formalin, phenol, or corrosive gas environments including, but not limited to, H2S, SO2, NO2, or Cl2.

4. SUNON recommends that you protect this module from exposure to outside elements such as dust, condensation, humidity or insects. Exposure of this module to outside elements such as dust, condensation, humidity or insects may affect its performance and may cause safety hazards. SUNON does not warrant against damage to the product caused by outside elements.

建準電機工業(股)公司 研發部 2011.08.01 發行章

Notes

5. This module must be installed properly and securely. Improper mounting may cause harsh resonance, vibration, and noise.

6. Fan guards may prevent injury during handling or installation of the module and are available for sale with this module.

7. Unless otherwise noted, all testing of this module is conducted at 25°C ambient temperature and sixty-five percent (65%) relative humidity.

8. DO NOT store this module in an environment with high humidity. This module must be stored in accordance with the attached specifications regarding storage temperature. If this module is stored for more than 6 months, SUNON recommends functional testing before using.

9. SUNON reserves the right to use components from multiple sources at its discretion. The use of components from other sources will not affect the specifications as described herein.

10. The "Life Expectancy" of this module has not been evaluated for use in combination with any end application. Therefore, the Life Expectancy Test Reports (L10 and MTTF Report) that relate to this module are only for reference.

VI. WARRANTY

This module is warranted against all defects which are proved to be fault in our workmanship and material for one year from the date of our delivery. The sole responsibility under the warranty shall be limited to the repair of the module or the replacement thereof, at SUNON's sole discretion. SUNON will not be responsible for the failures of its modules due to improper handing, misuse or the failure to follow specifications or instructions for use. In the event of warranty claim, the customer shall immediately notify SUNON for verification. SUNON will not be responsible for any consequential damage to the customer's equipment as a result of any modules proven to be defective.

建準電機工業(股)公司 研發部 2011.08.01 發行章

Declaration of RoHS

Control declaration of environment-related substances/materials

1. **In accordance with the Restriction of Hazardous Substances (RoHS) Directive, Sunon product models have complied with law and discipline not to employ the forbidden substances, and restrict the allowable concentration of some limited substances deliberately in our components.**

No	Substance		Criteria
1	CFCs & HCFCs (ozone depleting substances)		Forbidden
2	Chlorinated Organic Solvent		Forbidden
3	Lead and its compounds	Plastic (Frame, Impeller, wire harness, etc.)	<100ppm
		Solder	<1000ppm
		Steel alloy	<3500ppm
		Aluminium alloy	<4000ppm
		Copper alloy	<4wt%
4	Cadmium and its compounds	Solder	<20ppm
		Parts composed of metals containing zinc (e.g. brass, zinc for die casting)	<100ppm
		Plastic	<5ppm
5	PBBs and PBDEs		Forbidden
6	PCB and PCT		Forbidden
7	CP, Short-chain Chlorinated paraffins C10-13, Cl ≥48 wt%		Forbidden
8	Mirex		Forbidden
9	PCN		Forbidden
10	Hexavalent Chromium compounds		<100ppm
11	Mercury and its compounds		Forbidden
12	Asbestos		Forbidden
13	Organic Tin compounds		Forbidden
14	Azo compounds		Forbidden
15	TBBP-A in external case plastic parts of products (PCB is exempted)		<1000ppm
16	Nickel in external case parts, which are likely to result in prolonged skin exposure		<1000ppm

建準電機工業(股)公司 研發部 2011.08.01 發行章